USN	1	R	V			E	C			

RV College of Engineering®
Mysore Road, RV Vidyaniketan Post,
Bengaluru - 560059, Karnataka, India

NBA Accredited (UG - 6 Years
PG - 3 Years)

Department of Electronics & Communication Engineering

Date: 14/1/2026	**Improvement CIE**	**Max. Marks:60**
Semester: III	**UG**	**Duration: 2 Hrs**
Course: Network Analysis and Control Engineering		**Code:EC235AT**

S No	Part-A Quiz	M	BT	CO
1.	The open loop transfer function is given by $G(s) = \frac{(s+1)}{s^p(s+2)(s+3)}$ 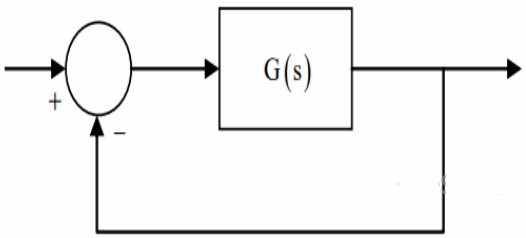 Fig. 1 It is connected in unity feedback configuration as shown in Fig1. Where p is an integer. Given that the steady state error is zero for unit step input and is 6 for unit ramp input, the value of the parameter p is _____.	2	3	1
2.	The unity feedback control system whose open loop transfer function is given by G(s) = . Determine the steady state error for a unit ramp input.	2	1	1
3.	For what values of 'a' does the system shown in figure 2 have a zero steady state error for a step input? 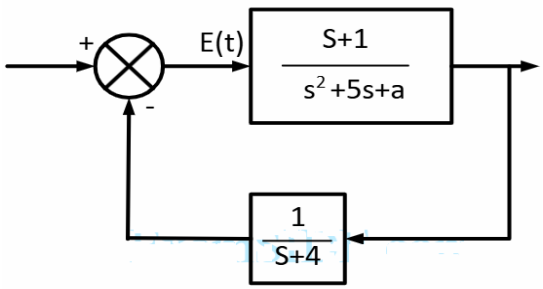 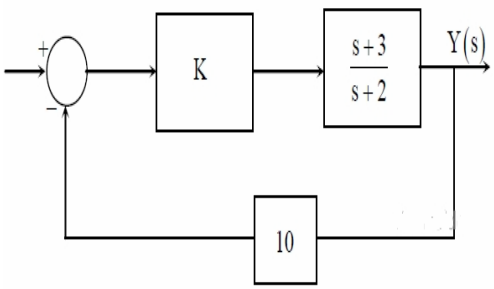 Fig 2 Fig 3	2	2	2
4.	The open-loop transfer function of a plant in a unity feedback configuration is given as $G(s) = \frac{K(s+4)}{(s+8)(s^2-9)}$ Find the value of the gain K (>0) for which -1 + j2 lies on the root locus.	2	2	4
5.	For the system shown in the Fig 3, s = –2.75 lies on the root locus if K is_____.	2	1	4
S No	**Part-B Test**	**M**	**BT**	**CO**

1a	The forward transfer function of a unity feedback type 1, second order system has a pole at -2. The nature of gain K is so adjusted that damping ratio is 0.4 . The above equation is subjected to input r(t) = 1 + 4t. Find the steady state error.	**06**	**2**	**2**
1b	For the Open loop transfer function • Find the marginal value of K at the intersection of imaginary axis.	**04**	**3**	**3**
2	The system shown in Fig. 4 employs derivative of feedback in addition to unity feedback. a. Find the value of constant K_0 so that the damping ratio of the system is 0.7. With this calculated value of K_0 and unit ramp input, find the value of steady state error. b. If $K_0 = 0$, calculate the value of damping ratio and undamped frequency of oscillations. What will be the steady state error resulting from unit ramp input? c. The value of steady state error is required to be 0.2 radians with derivative feedback and the damping ratio maintained at 0.7. How can this be achieved? 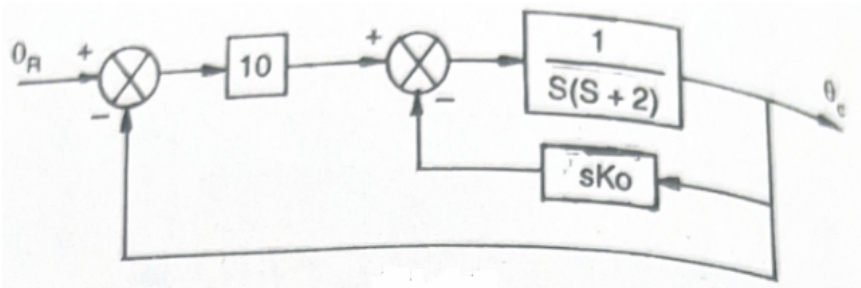 Fig. 4	**10**	**3**	**3**
3	Consider the feedback control system shown in figure 5 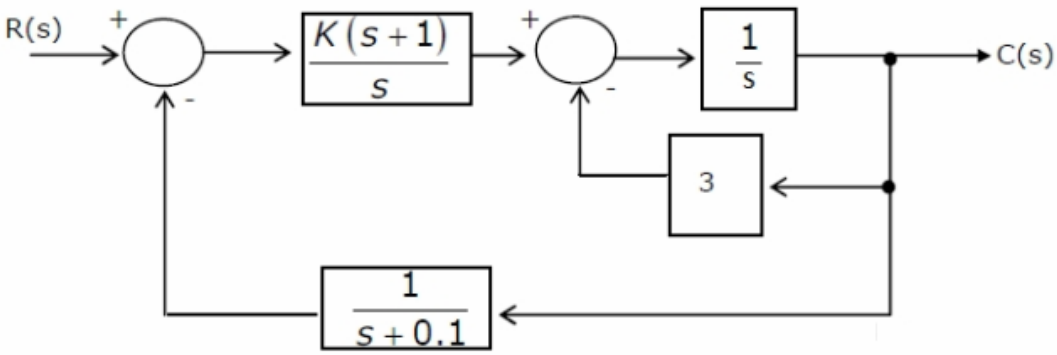 Fig. 5 a. Find the transfer function of the system and its characteristic equation. b. Use the Routh-Hurwitz criterion to determine the range of 'K' for which the system is stable	**10**	**3**	**3**
4	The characteristic equation of a feedback control system is $$s^4 + 20s^3 + 15s^2 + 2s + K = 0$$ (i) Determine the range of K for the system to be stable. (ii) Can the system be marginally stable? If so, find the required value of K and the frequency of sustained oscillation?	**8**	**3**	**3**
5a	Sketch the root locus plot for a negative feedback control system whose open loop transfer function is given by , for all values of K ranging from 0 to ∞. Also find the value of K for a damping ratio of 0.5.	**12**	**4**	**4**

Marks Distribution	Particulars		CO1	CO2	CO3	CO4	L1	L2	L3	L4	L5	L6
	Test	Max Marks	04	12	28	16	04	10	34	12	-	-

Date: 14/1/202	**Improvement CIE**	**Max. Marks:60**
Semester:III	**UG**	**Duration: 2 Hrs**
Course: Network Analysis and Control Engineering		**Code:EC235AT**

SCHEME & SOLUTIONS

S No	Solutions with Scheme	Marks
1.	**Ans: One** Steady-state error = 6 for unit ramp input • Finite ramp error ⇒ Type = 1 • Ramp error: $e_{ss} = \frac{1}{K_v}$ Given: $e_{ss} = 6 \Rightarrow K_v = \frac{1}{6}$ $K_v = \lim_{s\to 0} sG(s)$ Assume $p = 1$: $G(s) = \frac{s+1}{s(s+2)(s+3)}$ $K_v = \lim_{s\to 0} \frac{s(s+1)}{s(s+2)(s+3)} = \frac{1}{(2)(3)} = \frac{1}{6}$	2
2.	**ess = 1 / K_v = 40/400 = 1/10**	2
3.	**a = 0**	2
4.	**25.54**	2
5.	**0.3**	2
	PART B	
2	$\frac{\theta_c}{\theta_R}(s) = \frac{10}{s^3 + s(2 + K_0) + 10}$ $\omega_n = \sqrt{10} = 3.16$ rad/sec $2\xi\omega_n = 2 + K_0$ $K_0 = 2\xi\omega_n - 2$	

$$= 2 \times 0.7 \times 3.16 - 2$$

$$= 2.424$$

$$e_{ss} = \frac{R}{K_v} = \frac{1}{\lim_{s \to 0} s\, G_{(s)}}$$

$$G_{(s)} = \frac{10}{s\,(s + 2 + K_0)}$$

$$K_v = \frac{10}{2 + K_0} = \frac{10}{2 + 2.424} = 2.26$$

$$K_v = \frac{1}{2.26} = 0.44 \text{ radains}$$

$$G(s) = \frac{10}{s\,(s + 2)}$$

$$\frac{\theta_c}{\theta_R}(s) = \frac{10}{s^2 + 2\,s + 10}$$

$$\omega_n = \sqrt{10} = 3.16 \text{ rad/sec}$$

$$2\,\xi\,\omega_n = 2$$

$$\xi = \frac{1}{3.16} = 0.316$$

$$K_v = \lim_{s \to 0} s\,G(s) = \frac{10}{2} = 5$$

$$e_{ss} = \frac{R}{K_v} = \frac{1}{5} = 0.2 \text{ radians}$$

$$e_{ss} = 0.2 \text{ radians}$$

$$\xi = 0.7$$

	$K_v = \frac{R}{e_{ss}} = \frac{1}{0.2} = 5$ Also $K_v = \lim_{s \to 0} s\,G_{(s)} = \lim_{s \to 0} \frac{s\,A}{s\,(K_0 + 2)} = \frac{A}{K_0 + 2}$ where A = amplifier gain $\therefore \quad \frac{A}{K_0 + 2} = 5$ or $A = 5\,K_0 + 10$ Also $\quad 2\,\xi\,\omega_n = 2 + K_0$ where $\quad \xi = 0.7$ and $\omega_n = \sqrt{A}$ $\therefore 2 \times 0.7 \times \sqrt{A} = 2 + K_0$ or $\quad 1.96\,A = K_0^2 + 4\,K_0 + 4$ Putting the value of A from equation (1) in equation (2), we get $1.96\,(5\,K_0 + 10) = K_0^2 - 4\,K_0 + 4$ or $\quad K_0^2 - 4.8\,K_0 - 156 = 0$ $\therefore \quad K_0 = 7.02$ and -2.22 taking positive value of $K_0 = 7.02$ $A = 5\,K_0 + 10$ $= 5 \times 7.02 + 10$ $= 45.1$	
1b	S = ±j 1.515, K = 29.19 S = ±j 2.94, K = 54.8	

1a	$\frac{G(s)}{R(s)} = \frac{K}{s^2 + 2s + 2}$ $2\zeta\,\omega_n = 2$ $\omega_n = \frac{1}{\zeta} = \frac{1}{0.4} = 2.5$ $K = \omega_n^2$ $= (2.5)^2 = 6.25$ $G(s) = \frac{6.25}{s\,(s+2)}$ $e_{ss} = \frac{1}{1+K_p} + \frac{4}{K_v}$ $K_p = \lim_{s\to\infty} G_{(s)} = \infty$ $K_v = \lim_{s\to\infty} s\,G_{(s)} = \frac{6.25}{2}$ $e_{ss} = \frac{1}{1+\infty} + \frac{4\times 2}{6.25} = 1.28$	
3	(a) Transfer function = $\frac{K(s+1)(s+0.1)}{s^3+3.1s^2+s(K+0.3)+K}$ Characteristic equation = $s^3 + 3.1s^2 + s\,(K+0.3) + K = 0$ (b) F or K > 0 system is stable.	
4	(i) 0 < K < 1.49 (ii) When K = 1.49 then system is marginally stable. And the frequency of sustained oscillation = $\frac{1}{\sqrt{10}} rad/sec.$	

5a

Solution

Step 1: Plot the poles and zeros of $G(s)H(s)$ on the s-plane.

Step 2: $K = 0$ points are $s = 0, -3, (-1 \pm j1)$; $K = \infty$ points are $s = \infty, \infty, \infty, \infty$.

Step 3: A branch of the root locus always starts on a pole ($K = 0$) and ends on a zero ($K = \infty$).

Step 4: The number of branches of the root locus = P or Z, whichever is greater = 4.

Step 5: A point on the real axis lies on the root locus if the number of singularities to the right of this point are odd.

Step 6:

i. Number of asymptotes = $P - Z = 4 - 0 = 4$.

ii. The angle made by the asymptotes:

$$\phi_A = \frac{(2q+1)\,180^\circ}{P - Z}, \quad q = 0, 1, 2, 3$$

$$= 45^\circ,\ 135^\circ,\ 225^\circ,\ 315^\circ$$

iii. The centroid of the asymptotes is

$$\sigma_A = \frac{\Sigma\text{Finite poles} - \Sigma\text{Finite zeros}}{P - Z}$$

$$= \frac{(0 - 1 + j1 - 1 - j1 - 3) - (0)}{4 - 0} = -1.25$$

For closed-loop stability: $0 < K < 8.22$ (conditional

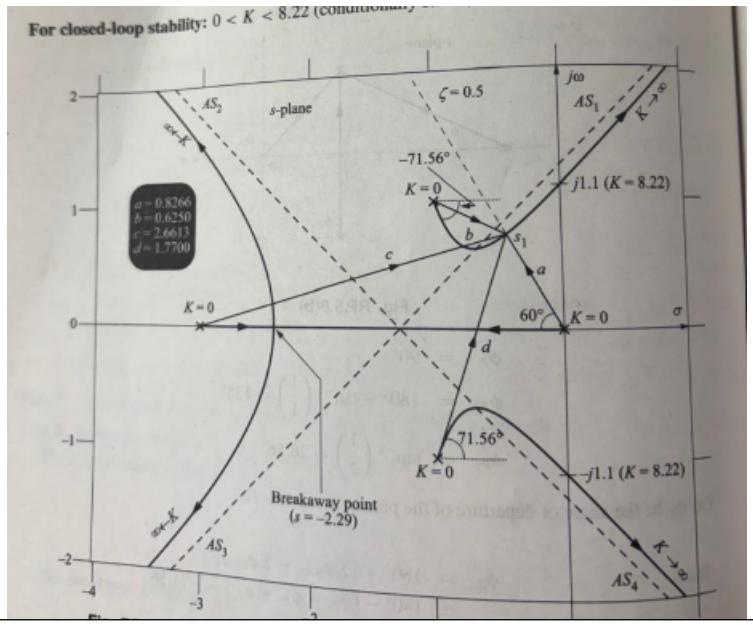

6

5b

6

Date: 14/1/2026	**Improvement CIE**	**Max. Marks:60**
Semester:III	**UG**	**Duration: 2 Hrs**
Course: Network Analysis and Control Engineering		**Code:EC235AT**

SCRUTINY & EVALUATION OF CIE QUESTION PAPER

Declaration by the Course handling faculties:

As a teaching faculty of the course Network Analysis and Control Engineering with code: EC235AT, We hereby confirm that the question paper with Scheme and Solutions is thoroughly reviewed and we ensure that it adheres to the following criteria:

Sl. No	Criteria	Yes/No
1	The question paper adequately covers the prescribed syllabus contents.	Y
2	The question paper is in line with the recommended pattern, taking into consideration the structure and format suitable for the Continuous Internal Evaluation.	Y
3	The question paper is designed to align with the Revised Bloom's Taxonomy, encompassing various levels of cognitive skills such as remembering, understanding, applying, analyzing, evaluating, and creating.	Y
4	The question paper is aligned with the defined course outcomes, ensuring that it effectively assesses the knowledge and skills acquired during the course.	Y
5	Course handling faculty (As applicable) are responsible for preparing the question paper, scheme, and solution have unanimously agreed to utilize this question paper for conducting the Continuous Internal Evaluation.	Y
6	The question paper, Scheme and Solution has been submitted to the Test coordinators within the designated timeframe to ensure the smooth conduction of Continuous Internal	Y

Course handling Faculties:

Name: **Signature**

1. Dr. Usharani K R
2. Dr. Veena Devi
3. Prof. Neeta B M
4. Prof. Sujata P M

To be filled by the Scrutinizer:

Sl. No	Rubrics	Points	
		Max	Awarded
1	Timely submission of the question paper along with the scheme & solution	10	
2	Heterogeneous nature of QP with respect to BTs and Cos	10	
3	Format with proper entry of all particulars including test, course name, code, date, max marks, BT CO table, efficient use of paper (proper spacing, figures)	10	
4	No handwritten data or diagrams	10	
5	Scheme & Solution in the format	10	
	Total points	**50**	
Any other comments by the scrutinizer :			

Note: Course coordinators to obtain scrutinizer's acceptance by incorporating all suggestions from scrutiny into the final versions of QP, Scheme, and Solutions.

All corrections suggested by the scrutinizer are incorporated and both the copies are re-submitted	**Signature of Course coordinator**
Accepted/Rejected	**Signature of Scrutinizer** **(Name:)**

Signature of HOD